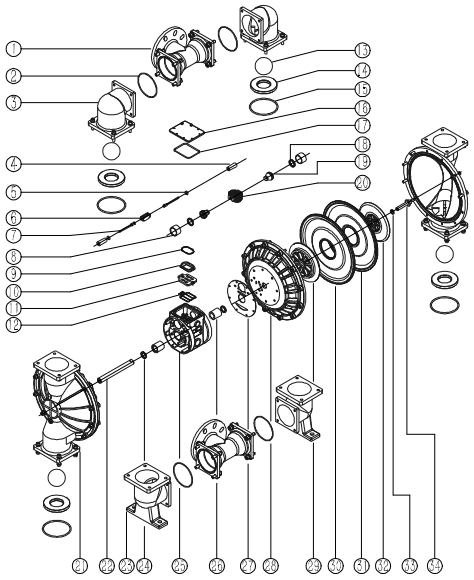

Parts List

No.	Name	No.	Name	No.	Name	No.	Name
01	Tee	02	Tee Sealing Ring	03	Upper Elbow	04	Booster Power Lever Sleeve
05	Booster Power Lever O-ring	06	Small Slider	07	Booster Power Lever	08	Piston Sleeve
09	Large Slider O-ring	10	Large Slider Seat	11	Boot Block	12	Boot Block Washer
13	Ball Valve	14	Ball Seat	15	Ball Seat Sealing Ring	16	Air Valve Chamber Cover
17	Air Valve Cover Washer	18	V-ring	19	Piston	20	Large Slider
21	Stand Column	22	Connecting Rod Axis	23	Lower Elbow	24	V-ring
25	Air Valve Chamber	26	Connecting Rod Axis Sleeve	27	Air Valve Chamber Washer	28	Clap Board
29	Inner Splint	30	Santoprene Diaphragm	31	Teflon Diaphragm	32	Outer Splint
33	Splint O-ring	34	Splint Screw				

BFQ-80

Aluminum alloy / Stainless steel
Nodular cast iron / Engineering plastics
Fluorine plastic

Stainless steel

Specifications

	BFQ-80
Max. Flow Rate	1041 lpm
Max. Head	84 m
Max. Suction Height	5.48 m
Max. Working Pressure	8.4 bar
Fluid Inlet/Outlet Size	DN80 (3")
Air Inlet Size	3/4" G (bspp)
Max. Permitted Grain	9.4 mm
Max. Air Consumption	3.0 m^3/min
Air Compressor Power	18.5~22 kw
Every Reciprocating Flow	7.6 L
Max. Reciprocating Speed	135 cpm

Pump body structure materials: Cast steel Nodular cast iron Aluminum alloy PP Stainless steel PVDF

Installation dimensions

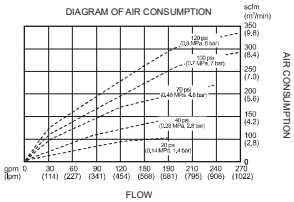

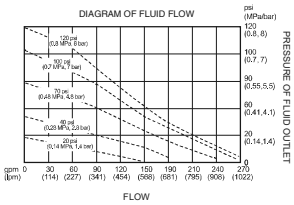

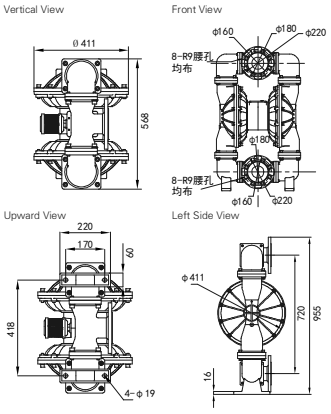

Note: GODO Manufacturing Co.,Ltd reserves the right to change product design without prior notice.
Please consult sales for latest product size.